NETWORKING & TELECOM APPLICATIONS

ADVANCED CIRCUIT PROTECTION DEVICES FOR OVERVOLTAGE TRANSIENT EVENTS



PROTEK DEVICES®

ONLY ONE NAME MEANS PROTEK'TION™

Communication interfaces are vulnerable to a variety of transient voltage threats such as electrostatic discharge (ESD), cable discharge events (CDE) and lightning surge. These threats provide the system designer with the challenge to incorporate over-voltage protection that meets or exceeds circuit protection standards (see Table 1), while not degrading the transmission rate. Key parameters, such as working voltage, clamping voltage and capacitance, must be taken into consideration when choosing an overvoltage protection device.

TABLE 1 - CIRCUIT PROTECTION STANDARDS

STANDARD	PEAK SURGE VOLTAGE - V	VOLTAGE WAVEFORM - µs	PEAK SURGE CURRENT - A	CURRENT WAVEFORM - µS
Bellcore	250	2/10	500	2/10
DO-160 Section 22 Waveform 3	100, 250, 600, 1500, 3200	1MHz Damped Sine	4, 10, 24, 60, 128	1MHz Damped Sine
DO-160 Section 22 Waveform 4	50, 125, 300, 750, 1600	6.9/69	10, 25, 60, 150, 320	6.9/69
DO-160 Section 22 Waveform 5	50, 125, 300, 750, 1600	40/120	50, 125, 300, 750, 1600	40/120
FCC Part 68	1500	10/160	200	10/160
GR-1089	1000	10/1000	100	10/1000
IEC 61000-4-2	±8kV Contact, ±15kV Air	1/30ns	30	8/20
IEC 61000-4-4	2kV, 4kV	5/50ns	40	8/20
IEC 61000-4-5	1kV, 2kV, 4kV	1.2/50	24, 48, 95	8/20
ITU-T-K20 & K21	4000	10/100	100	5/310

Device capacitance is often a decisive factor in higher data rate applications (see Table 2). A TVS diode, like other semiconductors, has an inherent capacitance. Capacitance is dependent on junction area, doping concentration and the voltage across the diode terminals. The reverse bias voltage is inversely related to device capacitance, as reverse bias increases the device capacitance decreases. As the doping concentration increases, the voltage rating of the diode decreases and device capacitance increases. On the other hand, devices with higher voltage values have smaller junction capacitance. Larger junction area relates to higher current handling capability. But as the device or junction size increases the device capacitance increases along with it.

TABLE 2 - DATA TRANSMISSION RATES

APPLICATION	DATA RATE Mbit/S	CAPACITANCE pF
LinBus	0.20	< 50
RS-232	0.20	
CanBus/Device Net	1.0	<30
T1	1.544	
E2	2.048	
I2C	2.4	
Ethernet	10	
FlexRay	10	
USB 1.1	12	< 20
E3	34.368	
RS-485	35	
T3	44.736	
Fast Ethernet	100	< 5
T5	400.352	< 3
USB 2.0	480	
E5	565.148	
IEEE-1394b	786.432	
GigabitE	1000	
DVI	3960	< 1
USB 3.0	5000	
USB 3.2 Gen 1	5000	
DisplayPort	5400	
USB 3.1, 3.2 Gen 2	10000	
HDMI 1.3	10200	
HDMI 2.0	18000	
USB 3.2 Gen 2x2	20000	
USB 4.0 V. 1	40000	< 0.5
Thunderbolt 3/4	40000	
USB 4.0 V. 2	80000	
Thunderbolt 5	80000	

One of the characteristics of a capacitor is lower impedance to time varying signals. The higher the frequency of a signal, lower the resistance offered to it. So when a TVS diode is used in a high data rate application, the intrinsic device capacitance tends to attenuate the signal. Hence, when the device capacitance is large the attenuation suffered by the high frequency signal is greater.

Figure 1 is a very good approximation of device capacitance and the data rate it can support. The curve represents the approximate limiting frequency for the capacitance(y-axis). A device with a capacitance value below the curve should not have any appreciable attenuation for a given signal.

To satisfy an ever-demanding market for greater safety and reliability of electronics, ProTek Devices continues to work with the major electronic equipment manufactures to develop next generation products that are protected with ProTek Devices circuit protection components. ProTek Devices offers low profile, space saving devices that provide low working voltage, lower clamping voltages and ultra low capacitance for high-speed communication applications.

SELECTION GUIDE



APPLICATION	PREFERRED DEVICES	ALTERNATE DEVICES
4-20mA	PSM36A	
Antenna	GBLCxx/C Series, PESD05BULC	GBLCxxI/CI Series
CanBus/Device Net	GBLC24C, PAM1CAN, PAM2CAN, PAM3CAN	ESOT24LCC-2, PESD1CAN, PESD2CAN
eSata	PLR0504F, PLR0506, PLR0524	GBLCxxCI Series, PLR0521
Fast Ethernet	PGBTxx04 Series, PLR2512, PTA03-3.3ULC	SMP6LLC05-2P
Gigabit Ethernet	PAZC099, PGBTxx04 Series, PLR3304, PLR3343	SRV25-4LC, PTA03-3.3ULC
HDMI or Display	PLR0514LC, PLRT0504LC, PUSB403	GBLCxxI/CI Series, PLR0502, PLR0508, PLR0524, PSDxxHP
I/O Link	DFN6-36, DFN8-36, PDFN3-32, PSM36A, SMBJ Series	GBLCxx/C Series, PDFN2-32, PSDxx/C Series, PSOTxx/C Series
LINBus	PAM1LIN, PAM2LIN, PAM1VN27	PESD1LIN, PESD1CAN, PESD2CAN
LVDS	PLR0504PLCN, PLR3304PLCN, SRV05-4LC	PAZC099
Power Line Communication	GBLCxx Series	
Power Over Ethernet	PSR05, SR2.8	ESOT24LCC-2, PSOTxx/C Series
RS-232	ET723, PSD15	
RS-422	SMDB712C, PSM712	422ELC, PSLCxxC Series
RS-485	PSM712, SMDB712C	PSLCxxC Series
SD/SIM Card	PLR0521, PLR0524P, PLR0504F	
Single Pair Ethernet	PLR3343, TRV-4LC	PGBT3304
USB 2.0	PLR0502, PLR0502-6, PLR0524P	GBLCxx/C Series, PLR0504F, PLR0521
USB 3.0	PLR0504PLCN, PLR0506LC, PLRT0504LC, PSDHP Series	PLR0506LP, PLR0514LC, PLR0521E, PUSB403
USB 3.1	PLR0502-6, PLRT0504LC, PSD Series	PLR0504PLN
USB Type-C	8.0SMDJ48A, PESD05BULC, PLR3343, PLR03331-0201, PLRT0504LC, PVCOM24	PESD05BULC, PLR3343
xDSL	DSL03-24, DSL70, TRV15-2LC	GBLCxxCI Series, PLR0521

Figure 1. TVS Capacitance vs. Transmission Rate

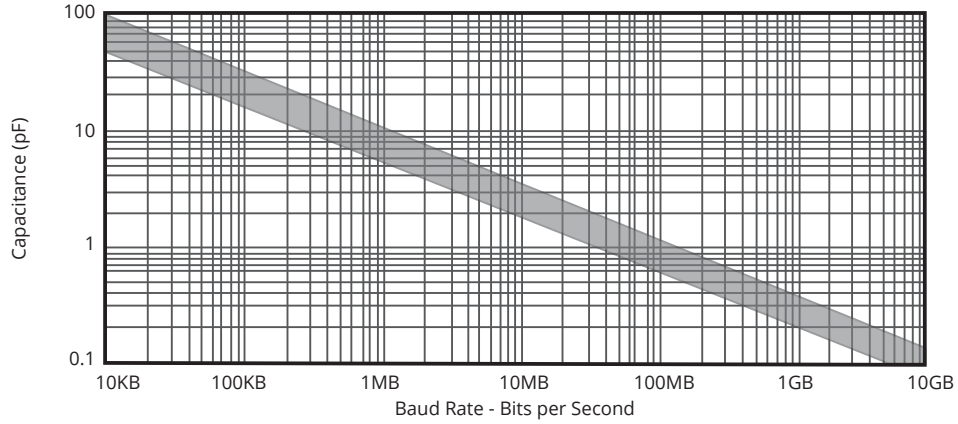

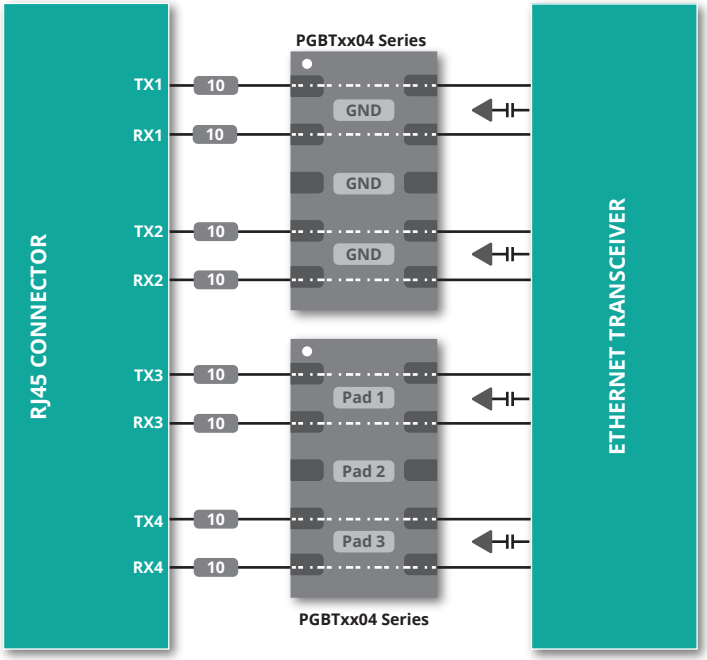

Figure 1. DO160 Sec. 22 W3L4, W4L4, W5AL2 Protection for Gigabit Ethernet Using the PGBT2504 or PGBT3304

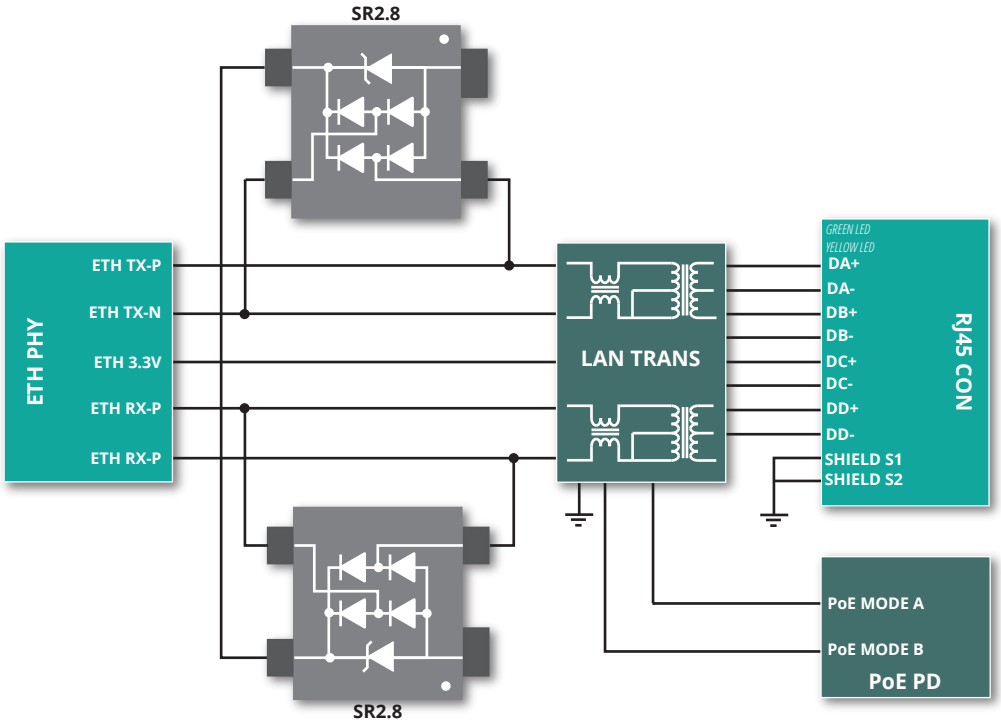

Figure 2. PoE (802.3at) ESD/EFT/Surge Protection Using SR2.8

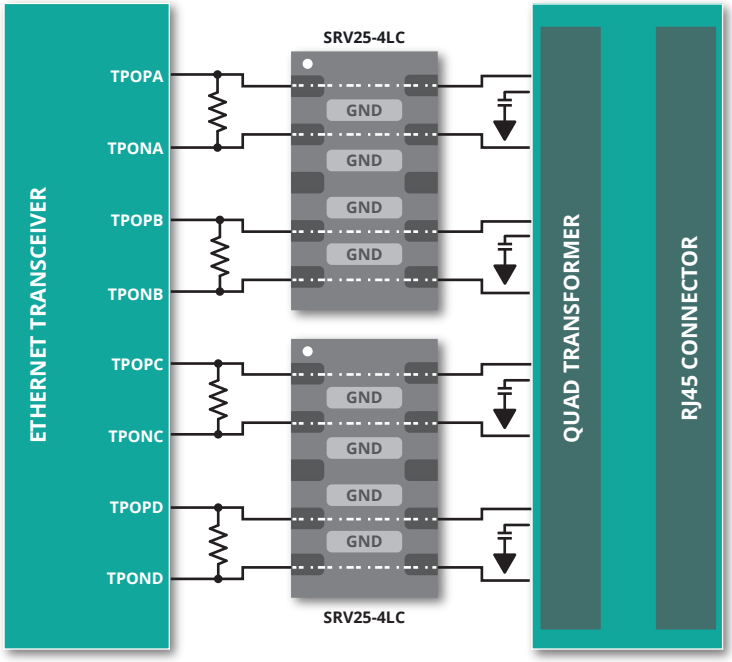

Figure 3. ProfiNet Interface ESD/EFT/Surge Protection Using SRV25-4LC

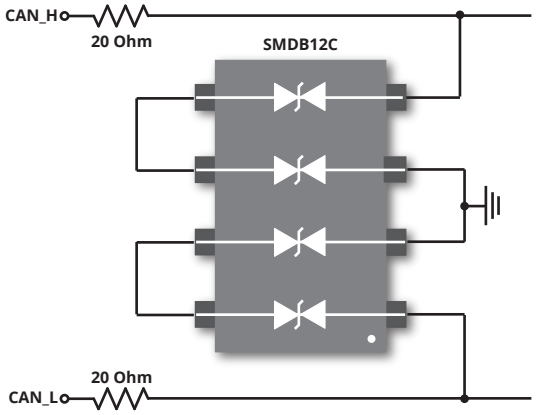

Figure 4. DO160 WF5A L3 Lightning Protection on 24V Canbus using SMDB12C

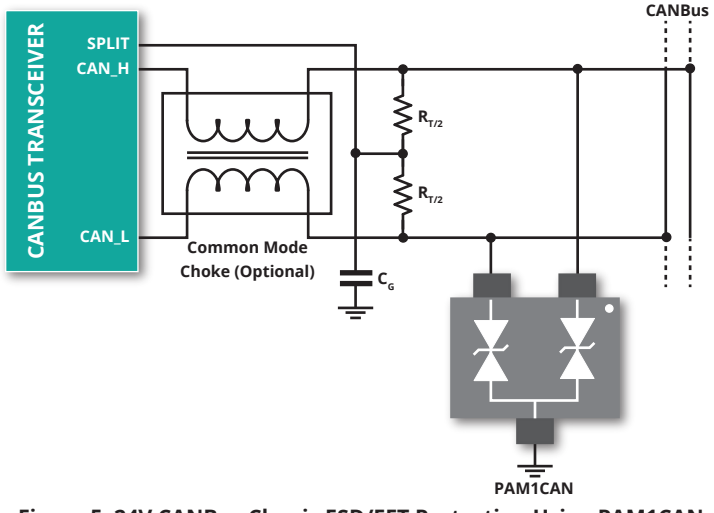

Figure 5. 24V CANBus Classic ESD/EFT Protection Using PAM1CAN

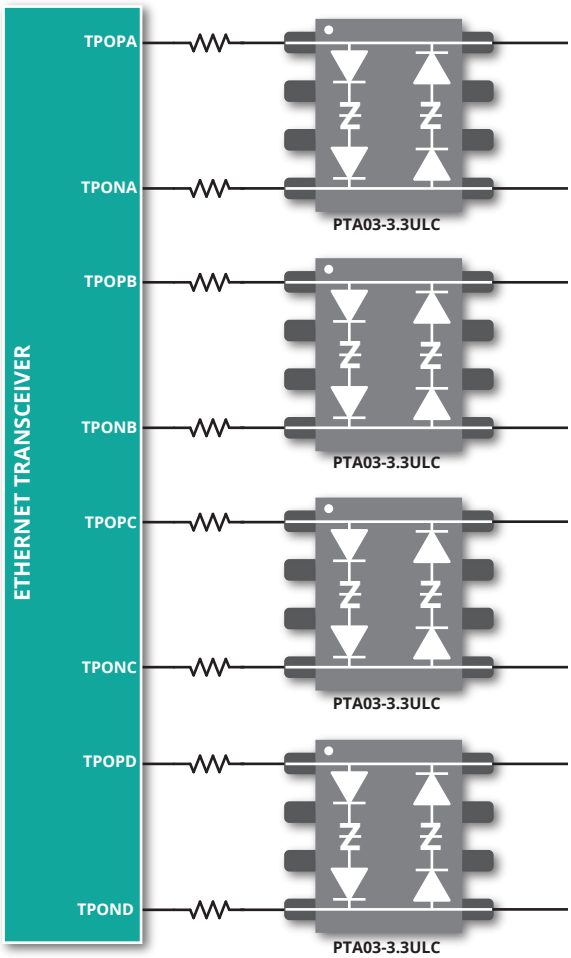

Figure 6. DO160 Sec. 22 W3L4, W4L4, W5AL2 Protection for Fast Ethernet (Differential Mode) Using the PTA03-3.3ULC

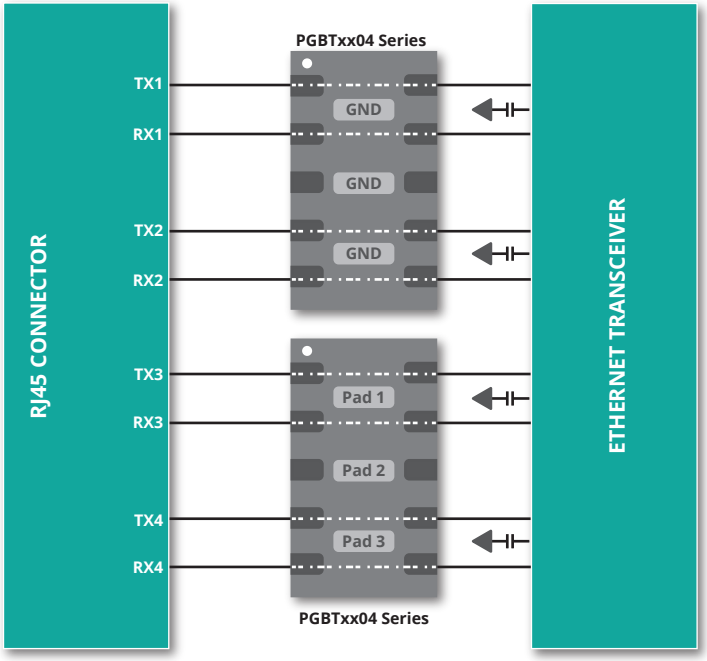

Figure 7. Gigabit Ethernet ESD/EFT/Surge Protection Using PGBTxx04 Series

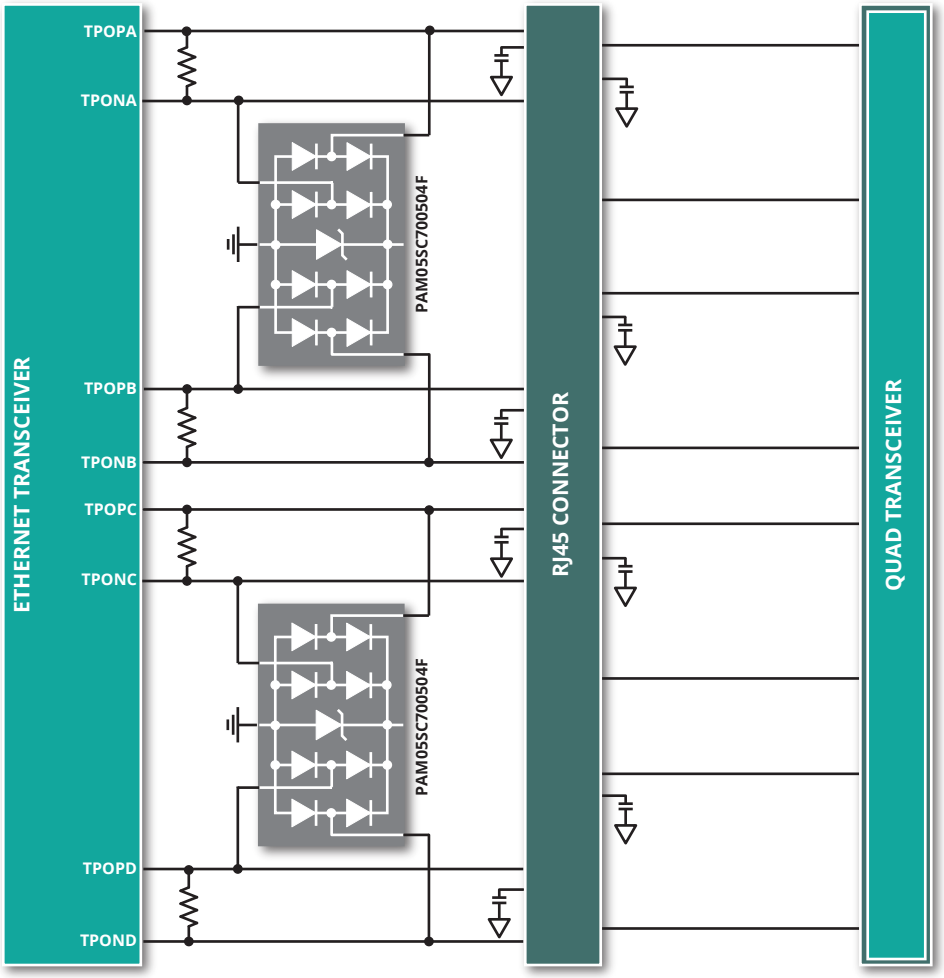

Figure 8. Gigabit Ethernet ESD/EFT Protection Using PAM05SC700504F



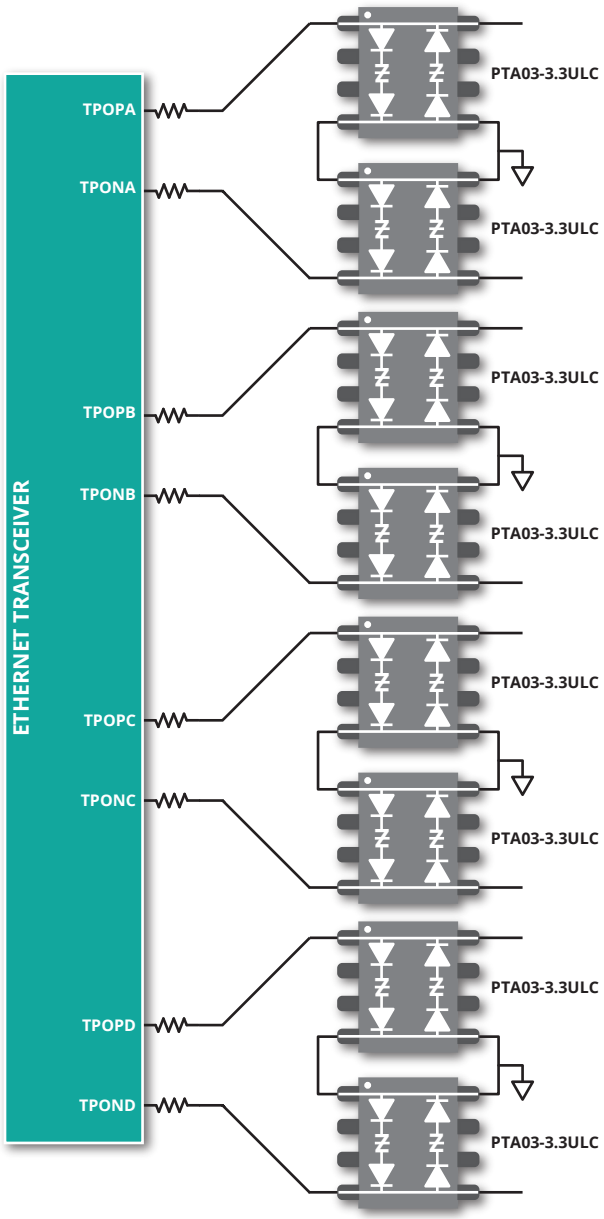

Figure 9. DO160 Sec. 22 W3L4, W4L4, W5AL2 Protection for Fast Ethernet (Common Mode) Using the PTA03-3.3ULC

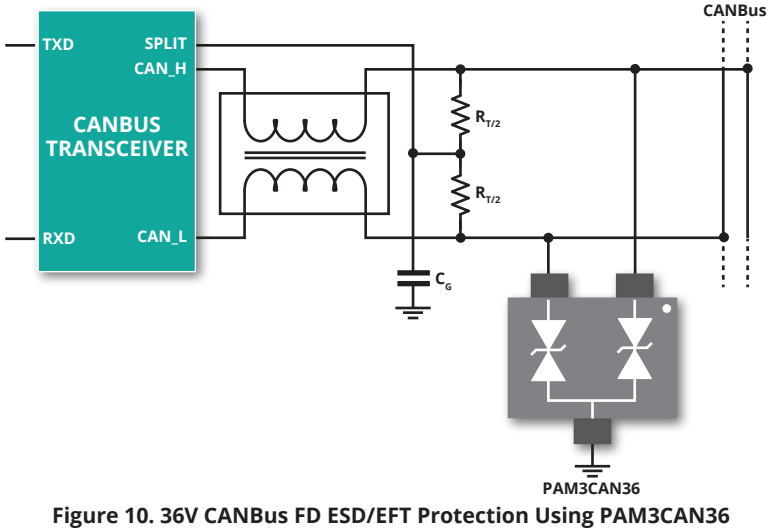

Figure 10. 36V CANBus FD ESD/EFT Protection Using PAM3CAN36

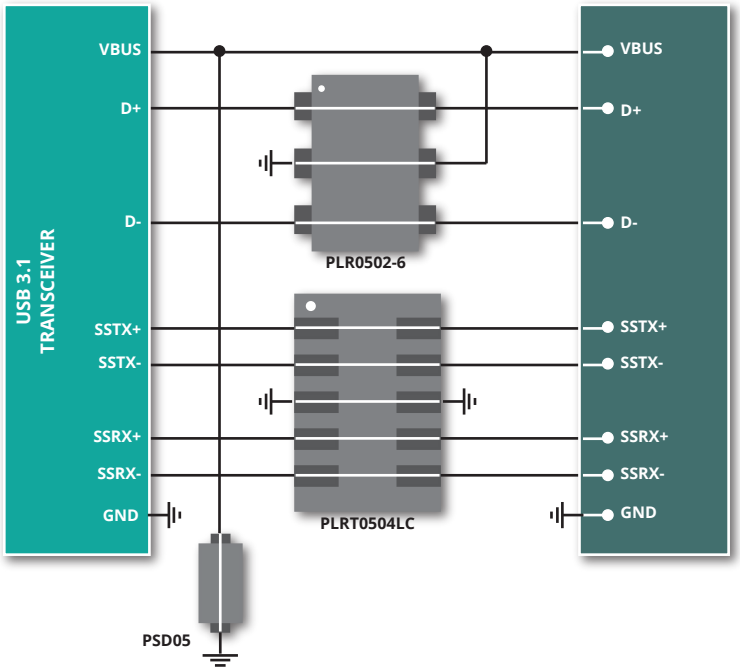

Figure 11. USB3.1 Interface ESD/EFT Protection Using the PLR0502-6, PLRT0504LC and PSD05

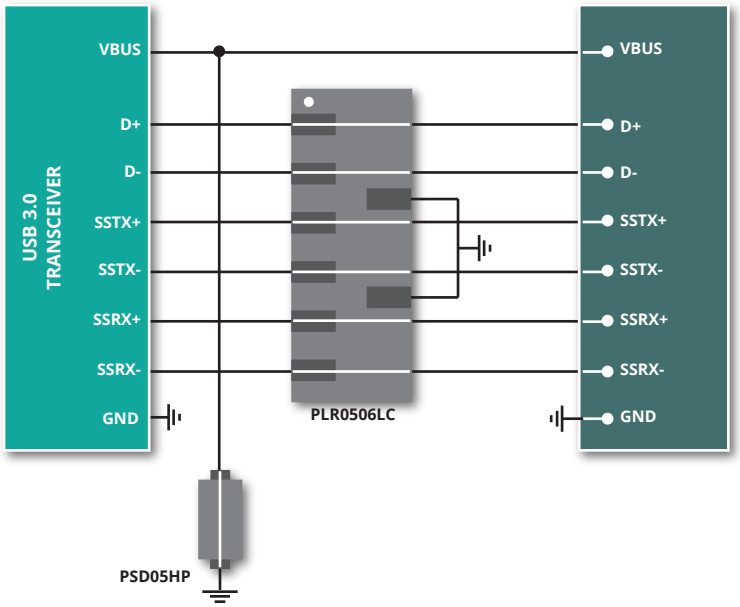

Figure 12. USB3.0 Interface ESD/EFT Protection Using the PLR0506LC and PSD05HP

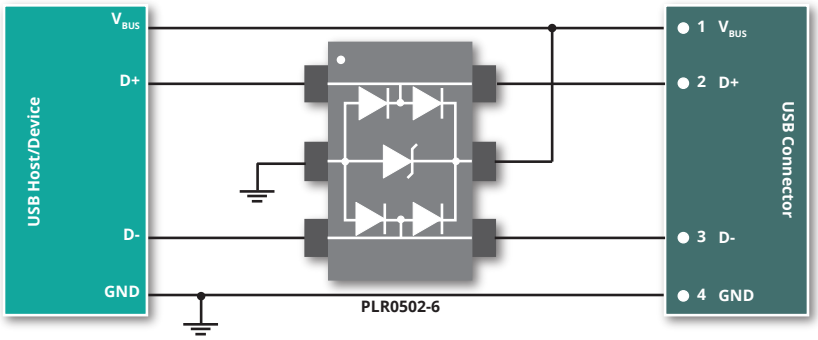

Figure 13. USB 2.0 Port ESD/EFT Protection Using PLR0502-6

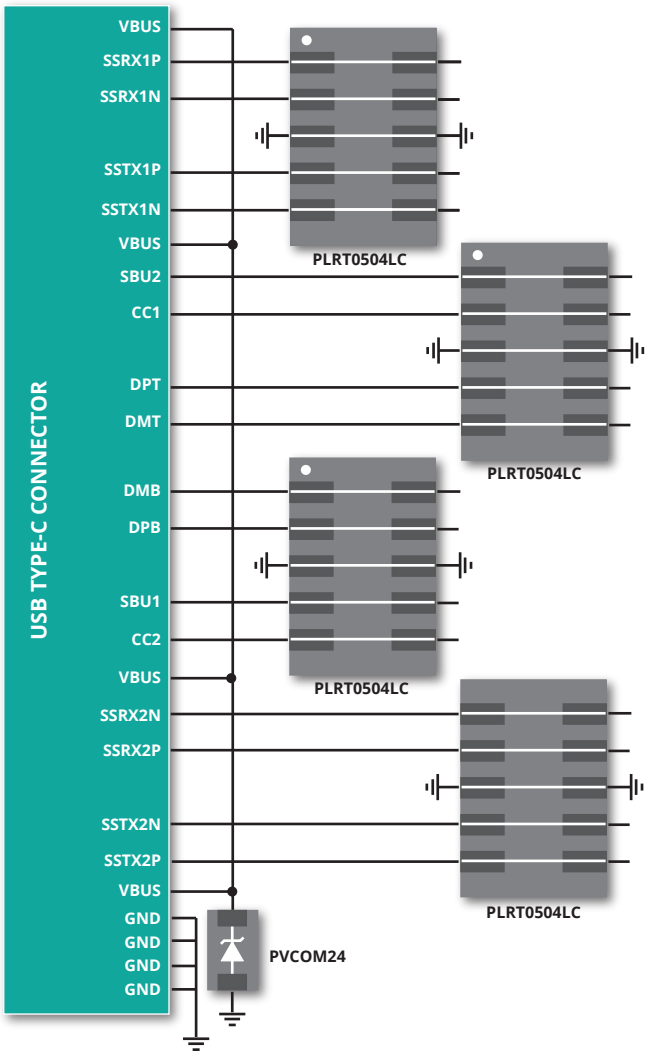

Figure 14. USB Type-C ESD/EFT/Surge Protection Using PLRT0504LC and PVCOM24

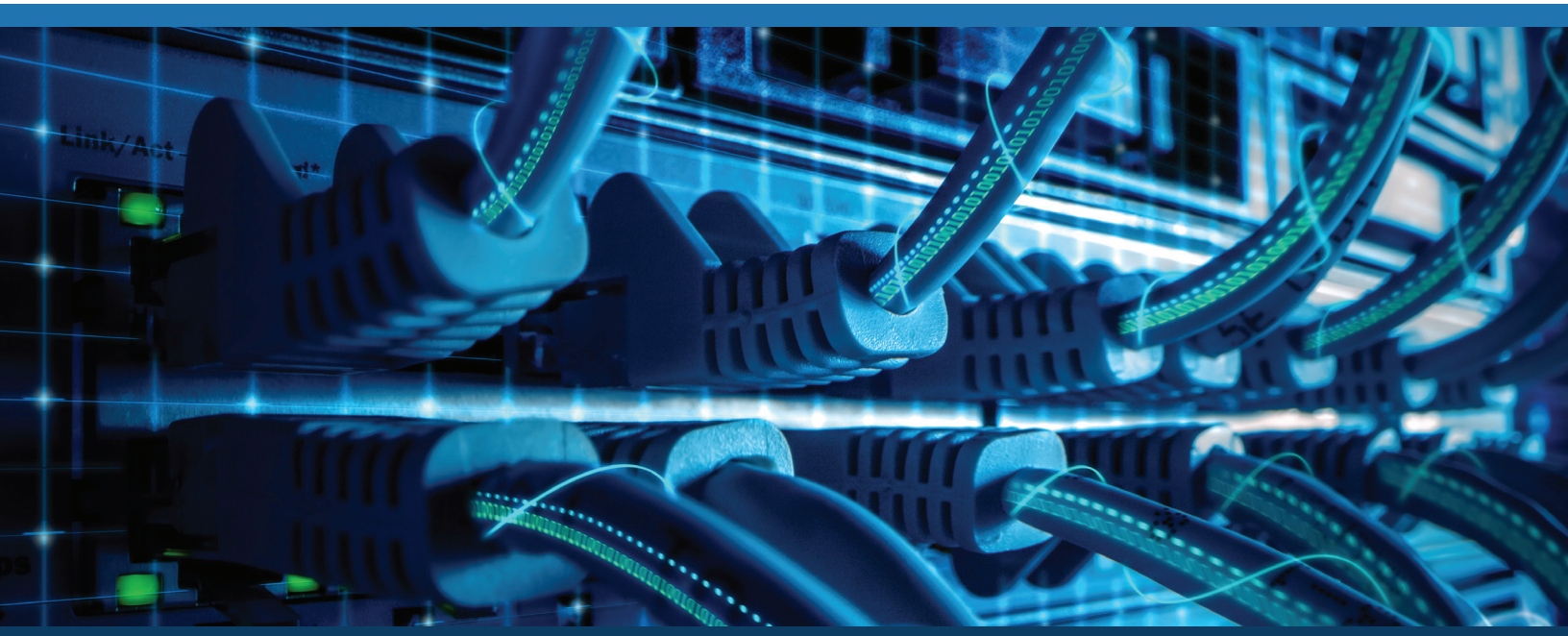

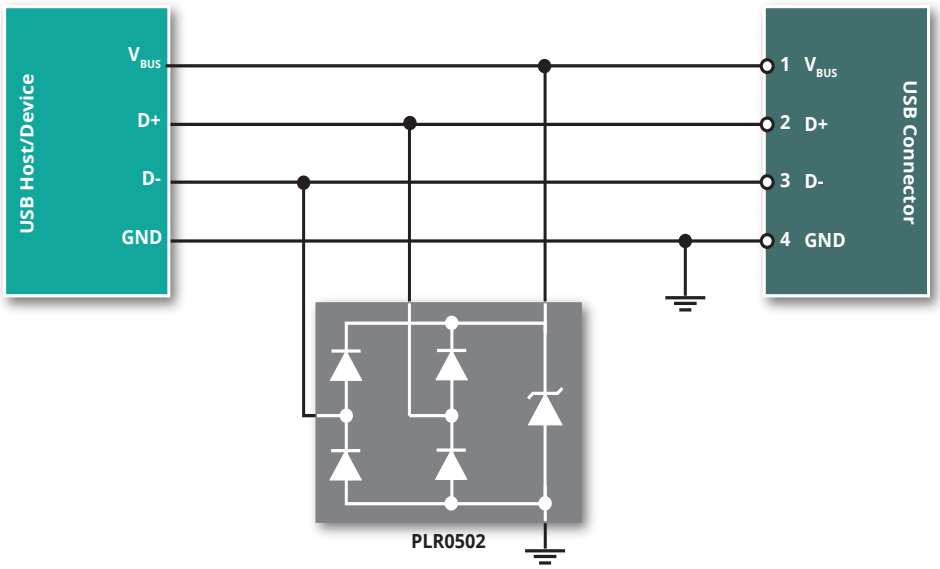

Figure 15. USB 2.0 Port ESD/EFT Protection Using PLR0502

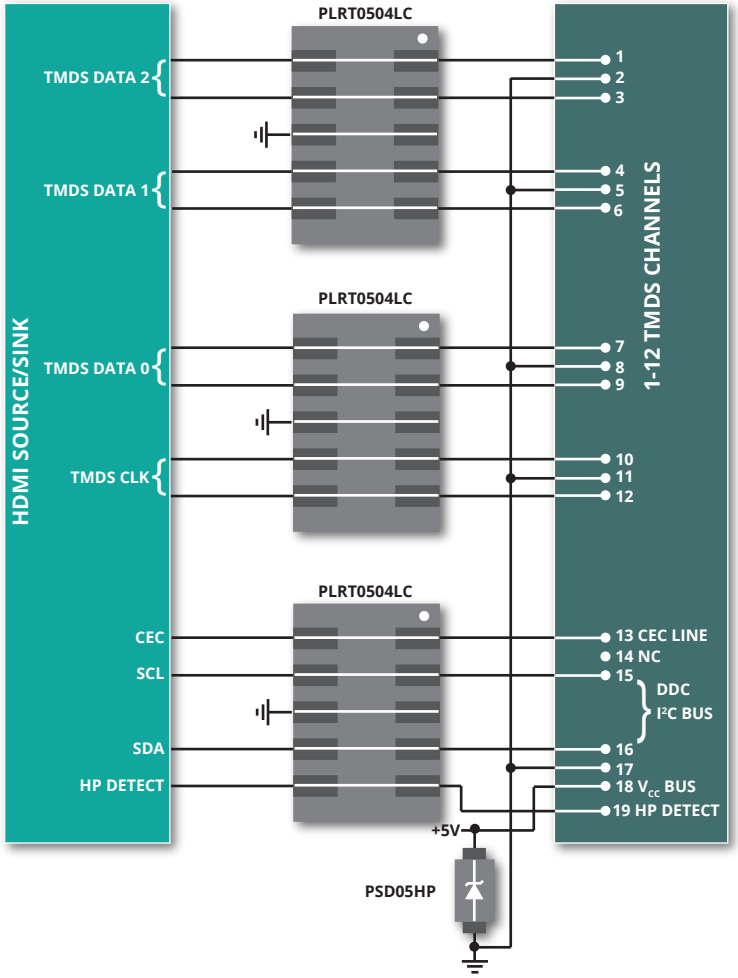

Figure 16. HDMI Interface ESD/EFT Protection Using the PLRT0504LC and PSD05HP

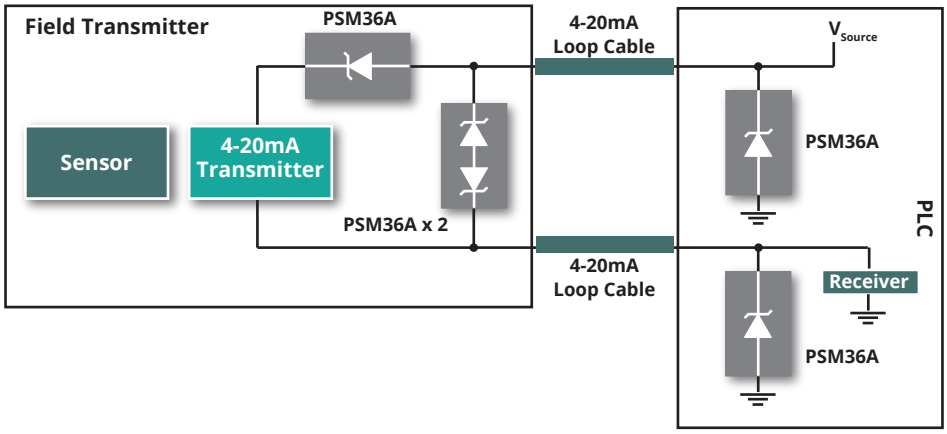

Figure 17 4-20mA ESD Protection Using PSM36A

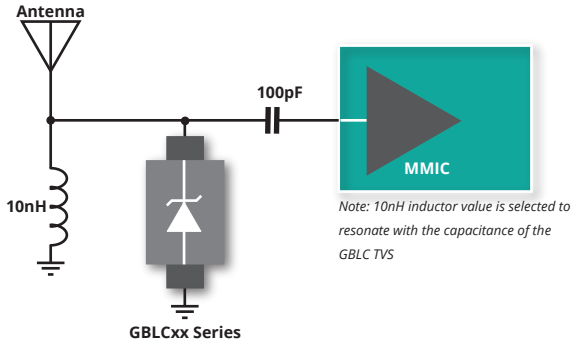

Figure 18. Antenna ESD/EFT Protection Using GBLCxx Series or Alterative PESD05BULC

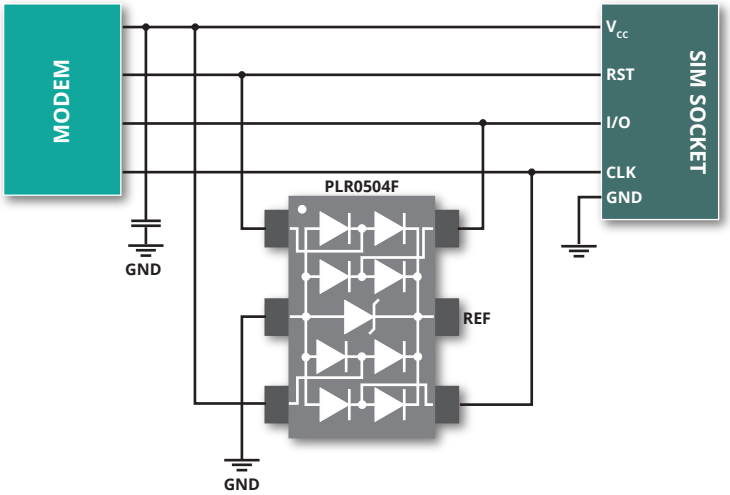

Figure 19. SIM Card ESD/EFT Protection Using PLR0504F

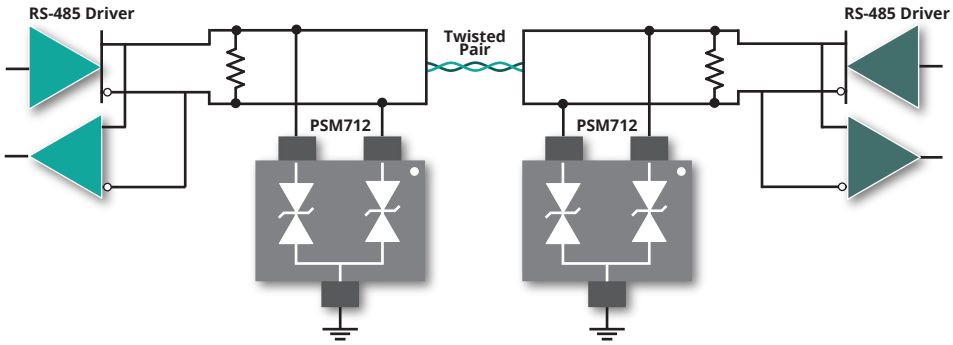

Figure 20. RS-485/RS-422 ESD/EFT/Surge Protection Using PSM712

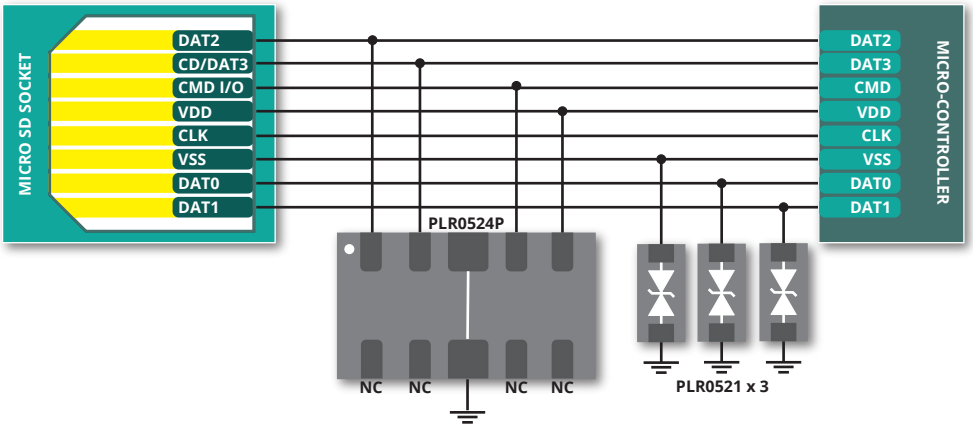

Figure 21. SD Card ESD/EFT Protection Using PLR0524P and PLR0521

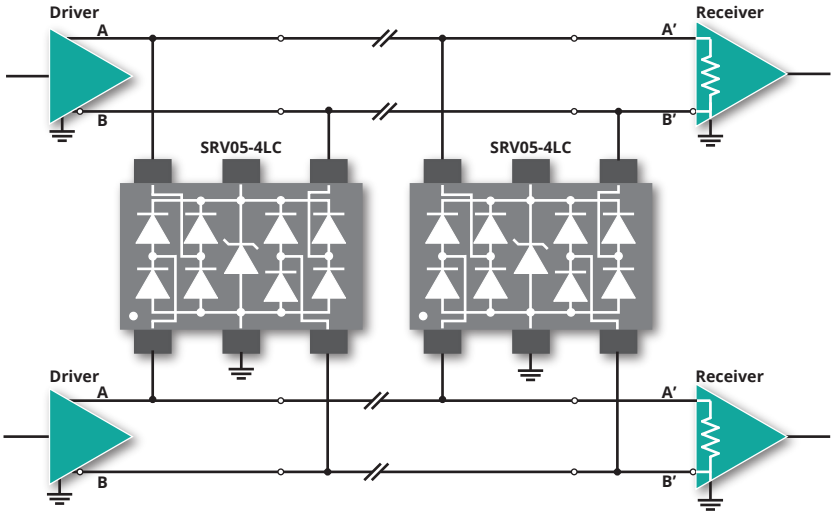

Figure 22. LVDS ESD/EFT Protection Using SRV05-4LC

SELECTION PROCESS	
TVS PARAMETERS	**APPLICATION PARAMETERS**
Stand-Off Voltage (V_R) ≥	Operating Voltage (V_{OP})
Pulse Current (I_P) ≥	Transient Current (I_T)
Clampling Voltage (V_C) ≤	Voltage Withstand Level (V_{WS})
Input Capacitance of the Device ≤	Acceptable Line Loading for Functional Pass

Graph Symbols/Parameters
B_V - Breakdown Voltage
I_R - Leakage Current
V_R - Reverse Stand-Off Voltage
V_C - Clamping Voltage
I_{PP} - Peak Pulse Current

Avalanche Junction TVS VI Characteristics

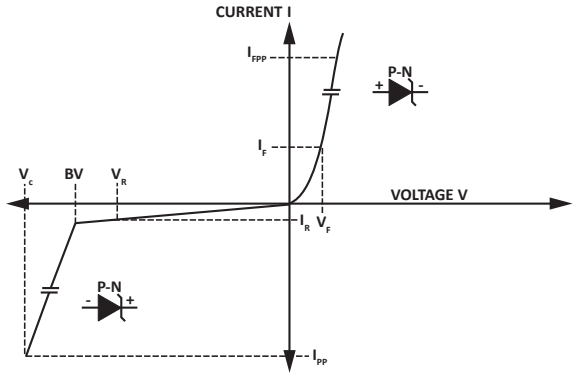

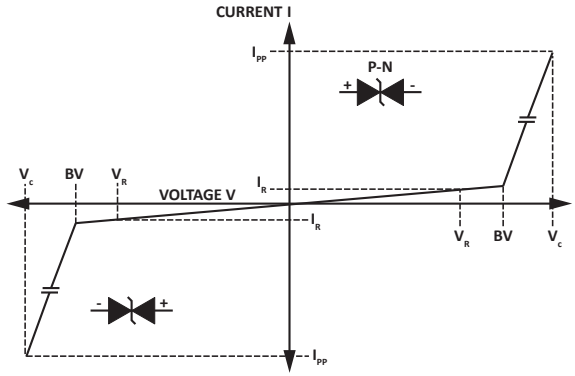

PART SPECIFICATIONS

PART NUMBER	STAND-OFF VOLTAGE V_{WM} VOLTS	BREAKDOWN VOLTAGE $V_{(BR)}$ VOLTS	CLAMPING VOLTAGE V_C VOLTS	PEAK PULSE CURRENT 8/20µs I_{PP} AMPS	MAXIMUM LEAKAGE CURRENT I_D µA	TYPICAL CAPACITANCE C pF	NO. OF LINES	POWER 8/20µs *10/x1000µs WATTS	PACKAGE
422ELC	12.0	-	30	500	1	25	1	-	-
8.0SMDJ Series	12.0 - 90.0	13.30 - 100.0	19.9 - 146	402.1 - 55.0	5	-	1	8000*	DO-214AB
DFN6-36	33.0	35.0	45.0	2.0	0.5	50	3	300	DFN-6
DFN8-36	33.0	35.0	45.0	2.0	0.5	50	4	300	DFN-8
DSL03-24	24.0	26.0	38.0	1.0	0.1	1.4	2	500	SOT-23-6
DSL70	24.0	85.0	1.5	1.0	0.005	3.0	2	-	SOT-143
ESOT24LCC-2	24.0	26.6	-	2.0	1	6	2	100	SOT-23
ET723	20	-	2	1.0	0.02	5	6	-	SO-8
GBLCxxC Series	3.3 - 24.0	4.0 - 26.7	7.0 - 43.0	1.0	5 - 1	3	1	350	SOD-323
GBLCxxCI Series	3.0 - 24.0	4.0 - 26.7	7.0 - 43.0	1.0	5 - 1	0.6	1	250	SOD-323
PAM05SC700504F	5.0	6.0	15.0	1.0	3	1.9	4	200	SC70-6L
PAM1CAN	24.0	25.4	46.0	3.0	0.002	11	2	200	SOT-23
PAM1VN27	27.0	28.0	27.0	3.0	0.01	15	1	135	SOD-323
PAM1LIN	15.0/24.0	17.2/25.5	25.0/40.0	1.0	45	17	1	200	SOD-323
PAM2CAN	24.0	25.4	60.0	4.0	0.05	11	2	230	SOT-23
PAM2LIN	24.0	26.7	43.0	1.0	0.05	3.3	1	350	SOD-323
PAM3CAN	24.0	25.4	70.0	2.1	0.002	5	2	150	SOT-23
PAM3CAN36	36.0	37.0	56.0	1.0	0.05	6	1	80	SOT-23
PAZC099	5.0	6.0	12.0	1.0	0.5	0.5	4	100	SOT-23-6
PDFN2-32	32.0	34.0	55.0	25.0	0.2	-	1	-	DFN2020-3
PDFN3-32	32.0	34.0	55.0	25.0	0.2	-	1	-	DFN-3
PESD05BULC	5.0	5.5	9.0	10.0	0.05	0.35	1	60	DFN-2

PART SPECIFICATIONS

PART NUMBER	STAND-OFF VOLTAGE V_{WM} VOLTS	BREAKDOWN VOLTAGE $V_{(BR)}$ VOLTS	CLAMPING VOLTAGE V_C VOLTS	PEAK PULSE CURRENT 8/20µs I_{PP} AMPS	MAXIMUM LEAKAGE CURRENT I_D µA	TYPICAL CAPACITANCE C pF	NO. OF LINES	POWER 8/20µs *10/x1000µs WATTS	PACKAGE
PESD1CAN	24.0	25.4	46.0	3.0	0.002	11	2	200	SOT-23
PESD1LIN	15.0/24.0	17.2/25.5	25.0/40.0	1.0	45	17	1	200	SOD-323
PESD2CAN	24.0	25.4	60.0	4.0	0.05	11	2	230	SOT-23
PGBTxx04 Series	2.5 - 3.3	3.0 - 5.0	6.0	5.0	0.1	1.0	2 Pairs	500	DFN-10
PLR0502	5.0	6.0	20.0	10.0	1	0.6	2	200	SOT-543
PLR0502-6	5.0	6.0	17.0	3.0	1	0.7	2	50	SC-89
PLR0504F	5.0	6.0	25.0	5.0	3	1.9	4	200	SC70-6L
PLR0504PLCN	5.0	6.0	8.0	1.0	0.5	1.5	4	250	DFN-10
PLR0506	5.0	6.0	15.0	1.0	3	0.8	6	72	DFN-8
PLR0506LC	5.0	6.0	12.0	1.0	0.1	0.4	6	64	DFN-8
PLR0506LP	5.0	6.0	18.0	4.0	3	0.8	6	72	DFN-8
PLR0508	5.0	6.0	13.0	5.0	1	1.6	8	200	DFN-10
PLR0514LC	5.0	6.0	12.0	1.0	1	0.35	4	-	DFN-10
PLR0521	5.0	6.0	20.0	4.0	1	0.4	1	80	DFN-2
PLR0521E	5.0	6.0	20.0	4.0	1	0.4	1	80	DFN-2
PLR0524	5.0	6.0	12.0	1.0	0.5	0.7	4	150	DFN-10
PLR0524P	5.0	6.0	12.5	1.0	0.5	0.8	4	60	DFN-10
PLR2512	2.5	2.7	10.2	10.0	0.05	3.0	2P	100	DFN-8
PLR03331-0201	3.3	5.0	9.0	10.0	0.05	0.35	1	60	DFN-2
PLR3304	3.3	3.5	5.5	1.0	0.1	4	4	400	DFN-10
PLR3304PLCN	3.3	4.0	6.0	1.0	0.1	1.5	4	250	DFN-10
PLR3343	3.3	5.6	10.0	1.0	1	0.25	4	150	DFN-10
PLRT0504LC	5.0	6.2	5.0	7.0	0.05	0.3	4	35	DFN-10
PRSB6.8C	4.7	5.7	13.0	1.0	0.5	15	1	50	DFN-2
PSDxx	3.3 - 36.0	4.0 - 40.0	6.5 - 60.0	1.0	125 - 1	500 - 35	1	500	SOD-323
PSDxxHP	5.0 - 12.0	6.0 - 13.3	9.8 - 19.1	1.0	20 - 2	800 - 440	1	1000	SOD-323
PSLCxxC	3.3 - 24.0	4.0 26.7	19.0 - 56.0	20.0 - 6.0	125 - 1	3	1	350	SOT-143
PSM712	7.0, 12.0	7.5, 13.3	11.0, 19.0	1.0	20, 1	75	1	600	SOT-23
PSOTxxC	3.3 - 36.0	4.0 - 40.0	6.5 - 51.0	1.0	125 - 1	500 - 60	1	500	SOT-23
PSR05	5.0	6.0	20.0	28.0	5	10	2	500	SOT-143
PSR05LC	5.0	6.0	20.0	28.0	5	2.5	2	500	SOT-143
PSM36A	36.0	39.0	52.0	25.0	0.2	250	1	2400	SOT-23
PTA03-3.3ULC	3.3	2.2	29.0	70.0	0.1	2.4	4	2000	SO-8
PVCOM24	24.0	26.0	45.0	37.0	200	197	1	1600	DFN-2
SMBJ Series	5 - 480	6.4 - 537	9.6 - 779	62.5 - 0.77	800 - 1	-	1	600*	DO-214AA
SMDB712C	7.0 - 12.0	8.5 - 13.3	13.4 - 19.0	1.0	10 - 2	284	4	800 - 1600	SO-8
SMP6LLCxx-2P	5.0 - 15.0	6.0 - 16.7	26.0 - 50.0	150.0-110.0	300 - 2	5	2	3900	SO-16
SR2.8	2.8	3.0	8.5	5.0	1	4.5	2	300	SOT-143
SRV05-4	5.0	6.0	15.0	5.0	5	2.5	4	250	SOT-23-6
SRV05-4LC	5.0	6.0	12.0	1.0	5	0.7	4	500	SOT-23-6
SRV25-4LC	2.5	3.0	7.4	10.0	0.5	1.7	4	800	DFN-10
TRV05-4LC	5.0	6.0	12.0	25.0	1	1.1	4	300	SOT-23-6

COMPANY PROFILE

In business more than 30 years, ProTek Devices™ is a privately held semiconductor company. The company offers a product line of overvoltage protection that include Transient Voltage Suppressor (TVS) Arrays, Steering Diode Array Hybrids, High-power Components and Modules, as well as Steering Diodes, EMI Filter/TVS Arrays and Thyristor Surge Suppressors. These components deliver circuit protection in electronic systems from numerous overvoltage events. They include lightning; electrostatic discharge (ESD); nuclear electromagnetic pulses (NEMP); inductive switching; and electromagnetic interference (EMI) / radio frequency interference (RFI). ProTek Devices is an ISO 9001 certified company.

CONTACT US

Corporate Headquarters
2929 South Fair Lane
Tempe, Arizona 85282
USA

By Telephone
General: 602-431-8101
Sales: & Marketing: 602-414-5109
Customer Service: 602-414-5114
Product Technical Support: 602-414-5107

By Fax
General: 602-431-2288

By E-mail:
Asia Sales: asiasales@protekdevices.com
Europe Sales: europesales@protekdevices.com
U.S. Sales: ussales@protekdevices.com
Distributor Sales: distysales@protekdevices.com
Customer Service: service@protekdevices.com
Technical Support: support@protekdevices.com

Web
www.protekdevices.com

ROHS & REACH COMPLIANCE

All devices, with the exception the modules/axial leads are Lead-Free, RoHS & REACH compliant. These products are designated as “lead free” and meet the requirements of the European Union’s restriction on the use of hazardous substances in electrical equipment as stated in (RoHS) direction, 2002/95/EC. ProTek Devices defines “lead free” as products that are compatible with current RoHS requirements for the 6 “banned” substances: Lead (Pb, <1000ppm), Cadmium (Cd, <100ppm), Mercury (Hg, <1000ppm), Hexavalent Chromium (Cr6+, <1000ppm), Poly Brominated Biphenyls (PPB, <1000ppm), Poly Brominated Diphenyl Ethers (PBDE, <1000ppm). This includes the requirements that lead not exceed 0.1% by weight in homogeneous materials.

COPYRIGHT © ProTek Devices (2026) - This literature is subject to all applicable copyright laws and is not for resale in any manner.

SPECIFICATIONS: ProTek Devices reserves the right to change the electrical and or mechanical characteristics described herein without notice.

DESIGN CHANGES: ProTek Devices reserves the right to discontinue product lines without notice and that the final judgment concerning selection and specifications is the buyer’s and that in furnishing engineering and technical assistance. ProTek Devices assumes no responsibility with respect to the selection or specifications of such products. ProTek Devices makes no warranty, representation or guarantee regarding the suitability of its products for any particular purpose, nor does ProTek Devices assume any liability arising out of the application or use of any product or circuit and specifically disclaims any and all liability without limitation special, consequential or incidental damages.

LIFE SUPPORT POLICY: ProTek Devices products are not authorized for use in life support systems without written consent from the factory.